Thermal Transfer Overprinting

DataFlex® product line

VIDEOJET

Our DataFlex® line of Thermal Transfer Overprinters delivers high uptime and high-resolution, variable content for flexible packaging and labels.

Our technology edge = your productivity edge

Optimal reliability and maximum productivity equate to more uptime on your production lines. **Whether you are marking simple date and time codes or printing more complex ingredients and marketing information onto flexible film packaging, labels, or glossy cards, our DataFlex® line helps your production lines run at peak performance.**

Every model in the DataFlex® line offers you these key operational advantages:

Uptime advantage

The DataFlex® line is designed to minimize both planned and unplanned production line stoppages caused by ribbon changeovers and ribbon breaks. The mechanical engineering is robust and reliable with minimal wear parts. Unique patented design features ensure production lines run at their maximum potential.

Code assurance

Our DataFlex® products have advanced software that enables you to get the right code in the right place, on the right product, time after time.

Built-in productivity

The DataFlex® line has built-in design features that maximise line efficiency and productivity while minimizing total cost of ownership. A 1,200m ribbon capacity provides more throughput of coded products between ribbon changes. The 0.5mm gap between prints and the ability to recapture ribbon after each print guarantees you achieve more prints per roll using Videojet's ribbon.

Simple usability

The whole family of DataFlex® products are designed to make operation quick, simple and virtually error proof. This means you can spend more time focusing on the critical aspects of your business.

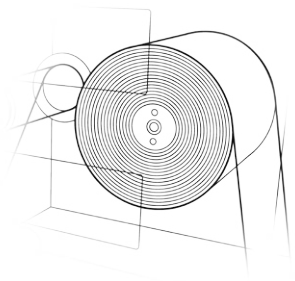

Up to 9,000 more prints per ribbon compared to competitive 1,100m ribbon*

*** based on 10mm code height with 0.5mm gap between prints**

Benefit from up to 9,000 more prints per ribbon and over 20 fewer line stops per year!*

*based on comparison to competitive 1,100m ribbon length; DataFlex® productivity benefits will be even greater versus shorter competitive ribbons.

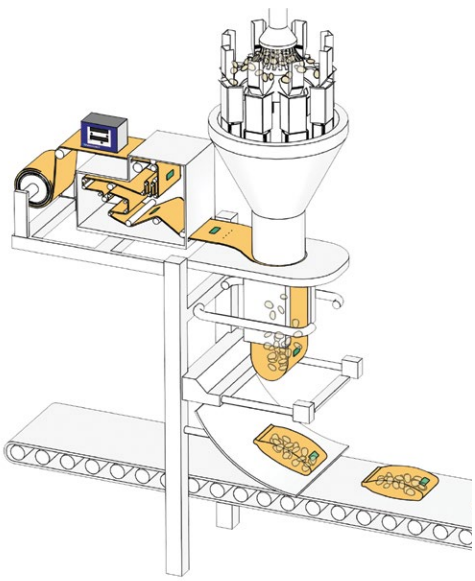

Example of DataFlex® integrated with Vertical Form, Fill and Seal packaging machine

DataFlex® 6320 and DataFlex® 6420

The Videojet DataFlex® line was engineered to meet your application requirements. The DataFlex® 6320 is ideal for printing at moderate speeds, coding up to 250ppm; while the high performance DataFlex® 6420 can operate at ultra-fast line speeds, coding up to 400ppm. Advanced built-in software makes operation both simple and reliable by virtually eliminating downtime and coding errors.

Our products are widely used throughout the snack food, bakery and confectionery markets, and demonstrate excellent performance in the frozen and refrigerated foods, meat and poultry, cosmetics, pharmaceutical and nutraceuticals industries. As a result of understanding your world, we have been able to design thermal transfer printers that integrate seamlessly with your packaging machinery.

Examples of the types of packaging machinery where Videojet's DataFlex® 6320 and DataFlex® 6420 would be the ideal coding solution:

Vertical Form, Fill and Seal machines used to package

- Potato chips
- Nuts / grains
- Candy
- Powders
- Hardware

Horizontal Form, Fill and Seal machines (also known as 'Flowrappers') used to package

- Bakery products (bread, biscuits, cookies)
- Confectionery

Thermoform and Tray-sealing machines used to package

- Cheese
- Processed meats

Pouch Filling machinery used to package

- Coffee & drinks
- Soups

IP rated for harsh environments

The IP rated DataFlex® Plus has been specifically engineered to operate in harsh environments where washdown is an essential part of daily operational process. Capable of printing up to 400 packs per minute, the IP DataFlex® Plus provides customers with the ultimate in on-line coding performance, reliability and efficiency.

When production is shut down in preparation for cleaning, the printer unit is made water tight by the simple replacement of the printing cassette with the IP65 cover – a process taking less than 20 seconds. The controller unit is protected to IP55 standard at all times and there is no need to remove either the printer or controller from the packaging line during cleaning. A very fast and efficient process that ensures operators are free to perform other production tasks.

Washdown ready in less than 20 seconds

Ribbons for all your needs

Videojet's thermal transfer ribbons offer high performance, excellent print quality and superior durability. Our wide ranging selection includes ribbons designed specifically to meet the challenges of flexible packaging applications.

Long length

Enables extended run times with fewer ribbon changes

Applications: *wrapped confectionery, bagged snacks, candy bars and sleeve wrappers for bottles.*

Extreme temperature

Optimal choice for hot-fill applications 180-195°F

Applications: *fresh-made soups and packages filled with hot products.*

Standard

General use solution for mid-range speeds

Applications: *salty/savory bagged snacks, fresh and frozen foods like vegetables, meat and poultry, dried fruit and candy.*

Super standard

Provides extra adhesion and super durability, recommended when film type and speed often varies

Applications: *glossy labels, pharmaceutical and nutriceutical labels, cosmetics, nutritional and ingredient statements.*

Premium

Ultimate adhesion, well suited for applications requiring resistance to temperature or chemicals

Applications: *glossy packaging, medical devices, pharmaceutical, automotive and high end cosmetic labels.*

It's fast and simple to get codes perfect. It's practically impossible to get them wrong.

There's no upside to downtime

- When your packing line goes down, your productivity isn't the only thing to suffer. Expensive resources sitting idle cut into your profitability, while delivery deadlines can also be threatened.
- The DataFlex® line features a patented and proven clutchless ribbon drive which is totally software controlled. This unique design eliminates the ribbon control devices required by other TTO products; devices that can contribute to unscheduled production downtime related to ribbon breaks or ribbon wrinkling.
- Simple cassette design makes ribbon replenishment inherently quick, ensuring the coder is back on line with minimal impact to production.

Code with complete confidence

- As operator error is the most common cause of coding errors, the DataFlex® line makes it fast and simple to get codes right, and practically impossible to get them wrong.
- The intuitive, easy-to-use software has intelligent data rules to help operators select the correct code.
- To aid the reduction of operator error further, a USB scanner option is available to provide fast, easy and fool proof job selection.
- These features all add up to less chance of error and more correct coded product.

We put more in so you can get more out

- The DataFlex® 6320 and DataFlex® 6420 models can use ribbon up to 1,200m in length for uninterrupted production runs, increasing your throughput of coded products per roll of ribbon.
- Total ribbon control from beginning to the end of the ribbon roll results in consistent print quality and minimizes ribbon waste between prints to 0.5mm.
- Other innovations in ribbons and ribbon technology also offer productivity dividends and low cost of ownership.

Great ideas proven to work

- Innovations in principle have to deliver in practice. All the innovations designed and engineered into the DataFlex® products do.
- The intuitive, high resolution graphical user interface provides a WYSIWYG job display, ensuring fast, simple and virtually error free operation.
- Serial, Ethernet and USB communications offer you flexible and comprehensive communications options.
- The DataFlex® line also includes an IP rated model for enhanced protection against dust and water, making it a perfect solution for washdown applications.

Peace of mind comes as standard

Videojet Technologies is a world-leader in the product identification market, providing in-line printing, coding, and marking products, application specific fluids, and product life cycle services.

Our goal is to partner with our customers in the consumer packaged goods, pharmaceutical, and industrial goods industries to improve their productivity, to protect and grow their brands, and to stay ahead of industry trends and regulations. With our customer application experts and technology leadership in Continuous Ink Jet (CIJ), Thermal Ink Jet (TIJ), Laser Marking, Thermal Transfer Overprinting (TTO), case coding and labeling, and wide array printing, Videojet has more than 325,000 printers installed worldwide.

Our customers rely on Videojet products to print on over ten billion products daily. Customer sales, application, service and training support is provided by direct operations with over 3,000 team members in 26 countries worldwide. In addition, Videojet's distribution network includes more than 400 distributors and OEMs, serving 135 countries.

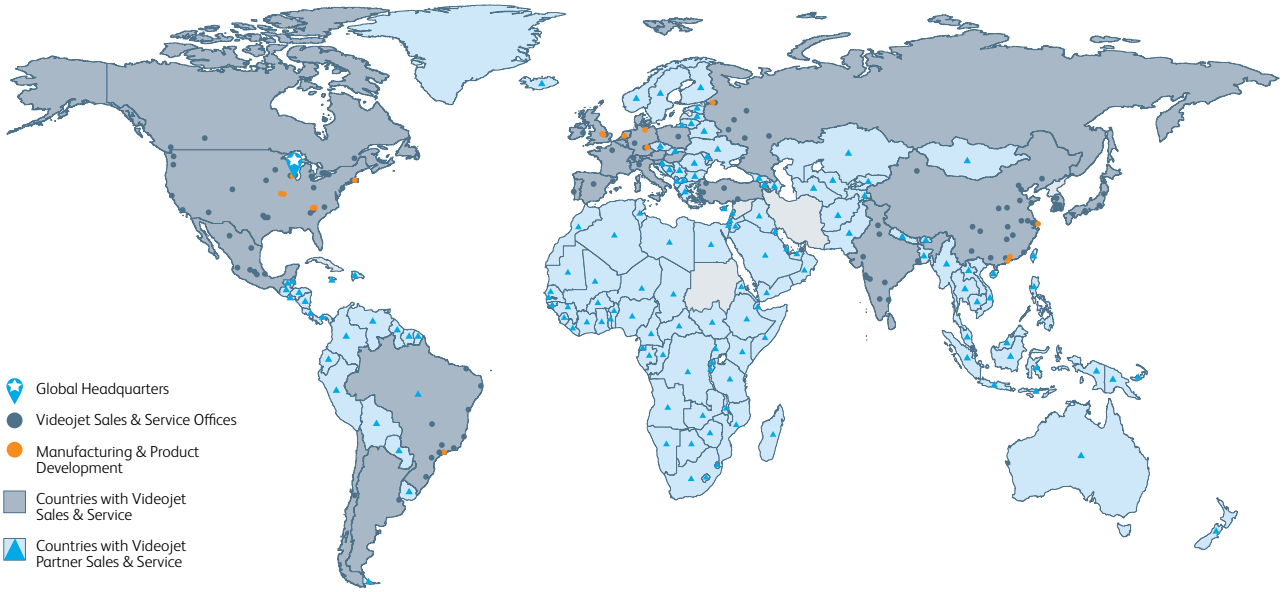

Call **800-843-3610**
Email **info@videojet.com**
or visit **www.videojet.com**

Videojet Technologies Inc.
1500 Mittel Blvd. Wood Dale IL 60191 / USA

©2014 Videojet Technologies Inc. — All rights reserved.

Videojet Technologies Inc.'s policy is one of continued product improvement. We reserve the right to alter design and/or specifications without notice.

Part No. SL000570
DataFlex ProdLine-0814
Printed in U.S.A.